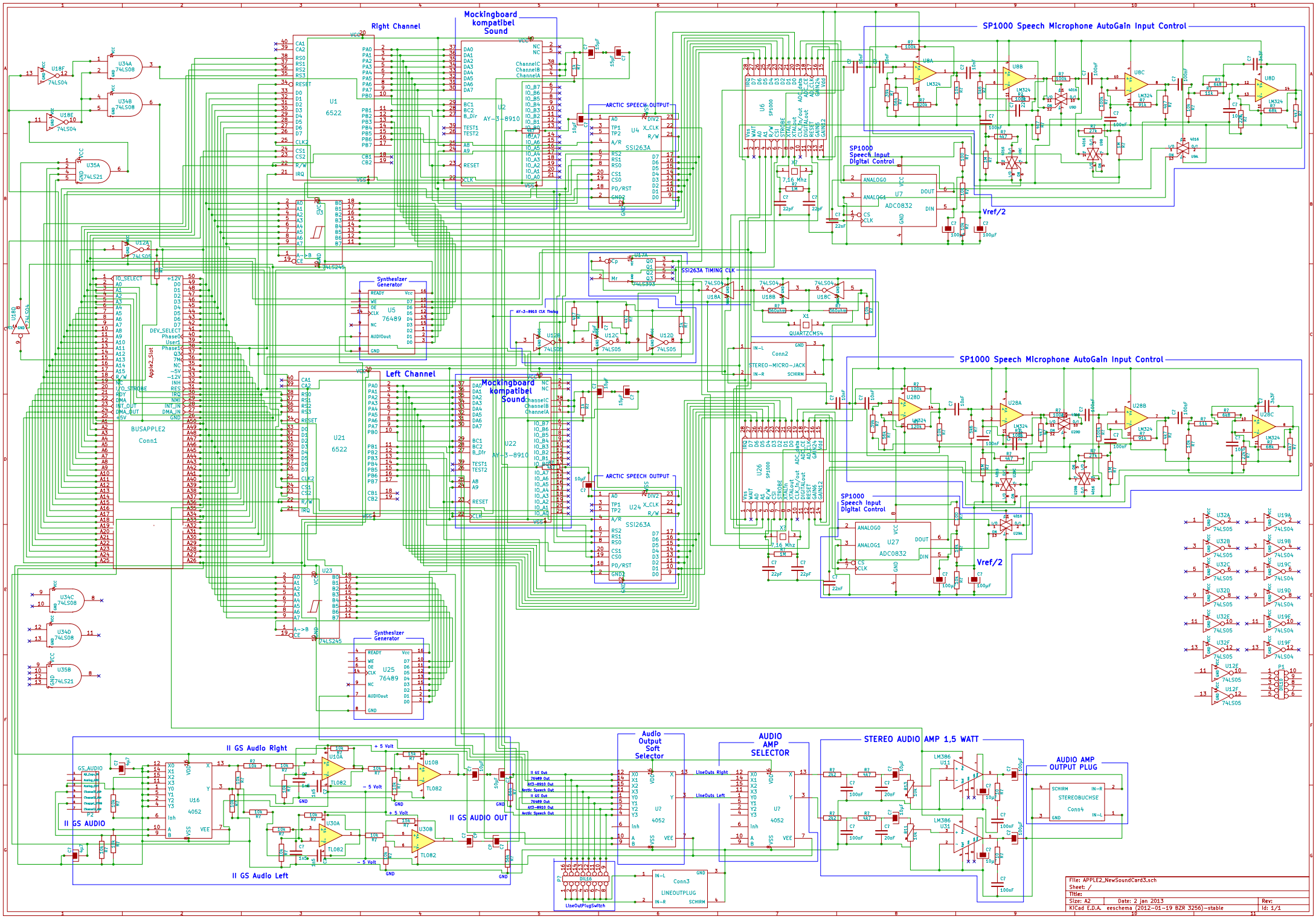
Right Channel
Mockingboard kompatibel Sound
SP1000 Speech Microphone AutoGain Input Control
ARCTIC SPEECH OUTPUT
SP1000 Speech Input Digital Control
Vref/2
SSI263A TIMING CLK
Synthesizer Generator
Left Channel
Mockingboard kompatibel Sound
SP1000 Speech Microphone AutoGain Input Control
ARCTIC SPEECH OUTPUT
SP1000 Speech Input Digital Control
Vref/2
II GS Audio Right
II GS AUDIO
II GS Audio Left
II GS AUDIO OUT
Audio Output Soft Selector
AUDIO AMP SELECTOR
STEREO AUDIO AMP 1,5 WATT
AUDIO AMP OUTPUT PLUG
File: APPLE2_NewSoundCard3.sch
Sheet: /
Title:
Size: A2
Date: 2 jan 2013
Rev:
KICad E.D.A. eeschema (2012-01-19 BZR 3256)-stable
Id: 1/1